SIMBA#

SIMBA# 7.5

CONSULTING ENGINEERS

Design and verification of water infrastructure

SIMBA# complements classic design with dynamic simulation: compare options objectively, verify the design under load cases and give clients a solid basis for decisions.

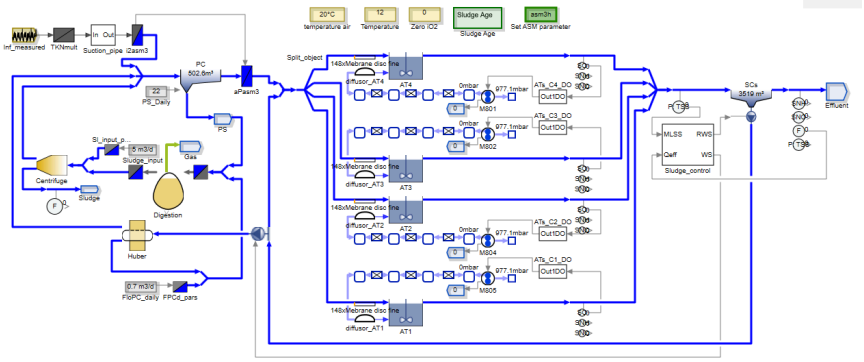

What SIMBA# does for you

- Conceptual studies and integrated urban drainage (DWA-A 100)
- First design and objective comparison of options – from balance to sizing
- WWTP verification according to DWA-A 131 and dynamic simulation of load cases
- Hydraulics of WWTPs, pumping stations and sewers (SWMM)
- Storage and overflows according to DWA-A 102 / A 128 including impact on receiving waters
- Water and pressure networks, rising mains and pressure sewers (EPANET)
- Integrated design of process, equipment and control, energy assessments
- Basis for investment decisions and funding applications

New in SIMBA# 7.5

- Automatic simplification of hydrodynamic sewer models into hydrological models
- Automated generation of real-time control (RTC) algorithms for sewer networks
- Wizard for analysing WWTP simulations, calibration and optimisation
- SCADA library for live plant integration, Sankey diagrams, .NET 10 platform

Why SIMBA#

- DWA guidelines built into the software
- One model from balance to digital twin
- Developed by ifak e.V. Magdeburg, local support

Get started

- Free trial licence – no time limit
- Training: 2-day courses by field
- Turnkey simulation studies – SEWACO services

SEWACO s.r.o. – Central and Eastern Europe · simba@sewaco.cz · +420 733 517 397
ifak technology + service GmbH – DE, AT, CH, NL · simba@ifak-ts.com
inCTRL Solutions Inc. – USA, Canada and other countries · simba@inctrl.com

More at
simba-simulator.eu/applications/