SIMBA#

SIMBA# 7.5

INFRASTRUCTURE OPERATORS AND OWNERS

Water networks and sewers

Sewers, water networks, pumping stations and pressure networks in one environment – from a hydrological overview to detailed hydrodynamics and real-time control.

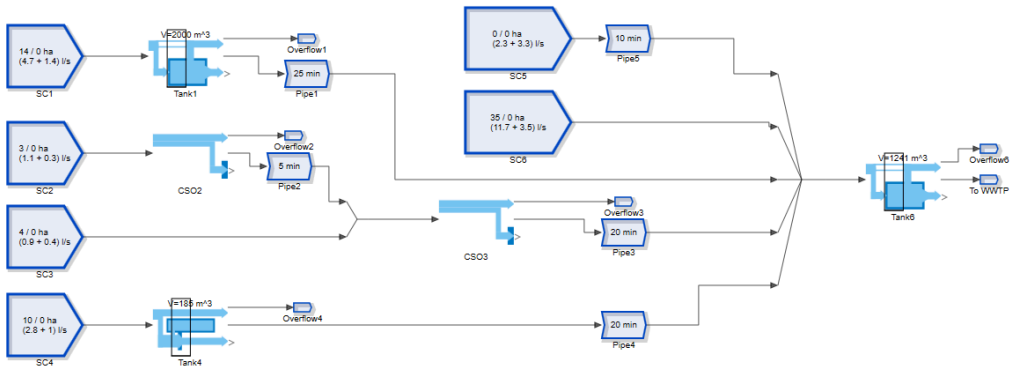

What SIMBA# does for you

- Hydrological and hydrodynamic sewer network models
- Combined sewer overflows and retention
- Automatic real-time control (RTC) and predictive control
- Water networks, rising mains and pumping stations (EPANET)
- Pressure sewers and wastewater pumping
- GIS and digital elevation model integration

New in SIMBA# 7.5

- Automatic simplification of hydrodynamic sewer models into hydrological models
- Automated generation of real-time control (RTC) algorithms for sewer networks
- Wizard for analysing WWTP simulations, calibration and optimisation
- SCADA library for live plant integration, Sankey diagrams, .NET 10 platform

Why SIMBA#

- DWA guidelines built into the software
- One model from balance to digital twin
- Developed by ifak e.V. Magdeburg, local support

Get started

- Free trial licence – no time limit
- Training: 2-day courses by field
- Turnkey simulation studies – SEWACO services

SEWACO s.r.o. – Central and Eastern Europe · simba@sewaco.cz · +420 733 517 397
ifak technology + service GmbH – DE, AT, CH, NL · simba@ifak-ts.com
inCTRL Solutions Inc. – USA, Canada and other countries · simba@inctrl.com

More at
simba-simulator.eu/applications/